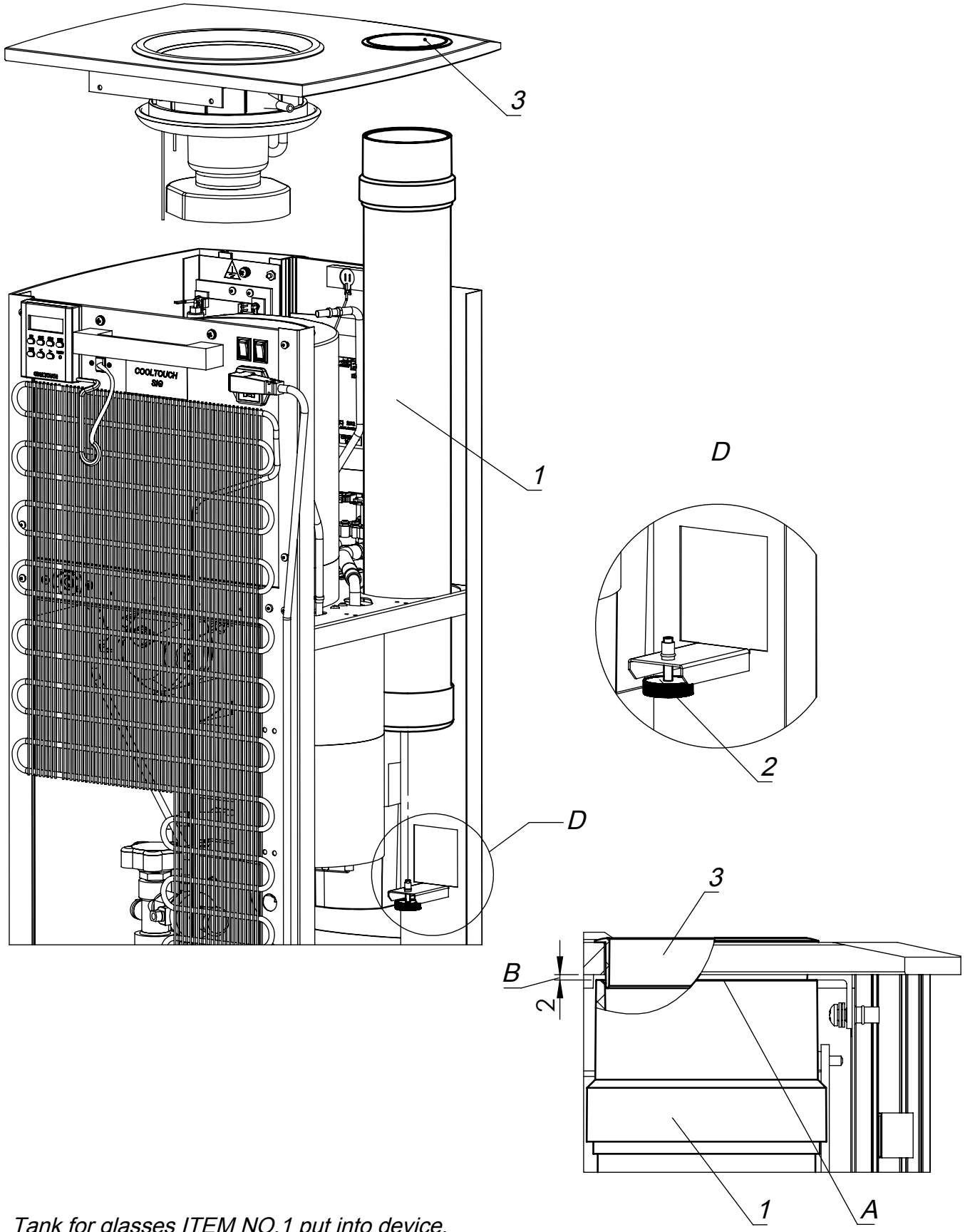

1. *Tank for glasses ITEM NO.1 put into device.*
2. *Top edge A of the tank and Edge Strip ITEM NO.3 aligned and fit top glass assembly.*
3. *The dimension B pass with Screw of the Group ITEM NO.2.*

ITEM NO	PART NUMBER	DESCRIPTION	QTY
1	200.00.039	Tank for glasses	1
2	GR73.25.M4.20	Group 71 71-25 M4x25	1
3	100.18.119	Edge strip (Part of top glass assembly)	1

Tank for glasses replacement